इंटरनेट मानक

Disclosure to Promote the Right To Information

Whereas the Parliament of India has set out to provide a practical regime of right to information for citizens to secure access to information under the control of public authorities, in order to promote transparency and accountability in the working of every public authority, and whereas the attached publication of the Bureau of Indian Standards is of particular interest to the public, particularly disadvantaged communities and those engaged in the pursuit of education and knowledge, the attached public safety standard is made available to promote the timely dissemination of this information in an accurate manner to the public.

"जानने का अधिकार, जीने का अधिकार"
Mazdoor Kisan Shakti Sangathan
"The Right to Information, The Right to Live"

"पुराने को छोड नये के तरफ"
Jawaharlal Nehru
"Step Out From the Old to the New"

IS 11162-5 (1985): Dimensions of non-insulated terminal tags for electronic equipment, Part 5: Type 5 [LITD 3: Electromechanical COmponents and Mechnical Structures for Electronic Equipment]

"ज्ञान से एक नये भारत का निर्माण"
Satyanarayan Gangaram Pitroda
"Invent a New India Using Knowledge"

Act Number 22 of 2005
The Indian Parliament
RIGHT TO INFORMATION

Made Available By
Public.Resource.Org

"ज्ञान एक ऐसा खजाना है जो कभी चुराया नहीं जा सकता है"
Bhartṛhari—Nītiśatakam
"Knowledge is such a treasure which cannot be stolen"

BLANK PAGE

BRUTUM FULMEN

IGNORANTIA JURIS NON EXCUSAT

PROTECTED BY COPYRIGHT

Indian Standard

(Reaffirmed 2002)

DIMENSIONS OF NON-INSULATED TERMINAL TAGS FOR ELECTRONIC EQUIPMENT

PART 5 TYPE 5

1. Scope — Covers dimensions of terminal tags of Type 5.

2. Dimensions — *See* Fig. 1.

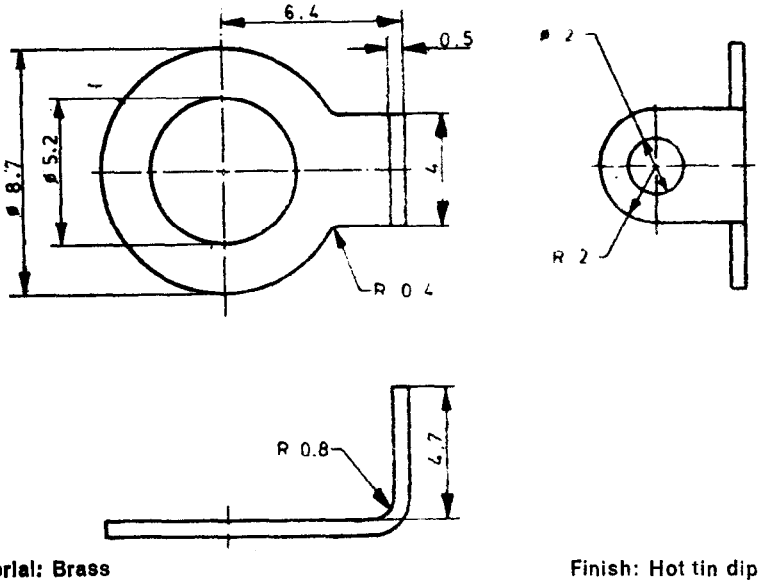

Material: Brass Finish: Hot tin dipped

Note 1 — Tolerence for holes $^{+0{\cdot}08}_{-0{\cdot}03}$.

Note 2 — Unless otherwise specified, tolarance is ± 0·15.

Note 3 — All dimensions in millimetres.

Note 4 — The brass shall be according to IS : 410-1977 'Cold rolled brass sheet, strip and foil (*third revision*)'.

FIG. 1 TERMINAL TAG, TYPE 5

Electromechanical Components for Electronic Equipment Sectional Committee, LTDC 7; Panel for Terminal Tags, LTDC 7 : P2 [Ref : Doc : LTDC 7 (417)].

Printed at Atcee Press, New Delhi, India

Adopted 21 February 1985 © July 1985, ISI Gr 1

INDIAN STANDARDS INSTITUTION
MANAK BHAVAN, 9 BAHADUR SHAH ZAFAR MARG
NEW DELHI 110002